FRETURE

EMISSION FREE PROCESS

INNOVATION FOR SUSTAINABILITY

PROCESS AUTOMATION & CONTROL

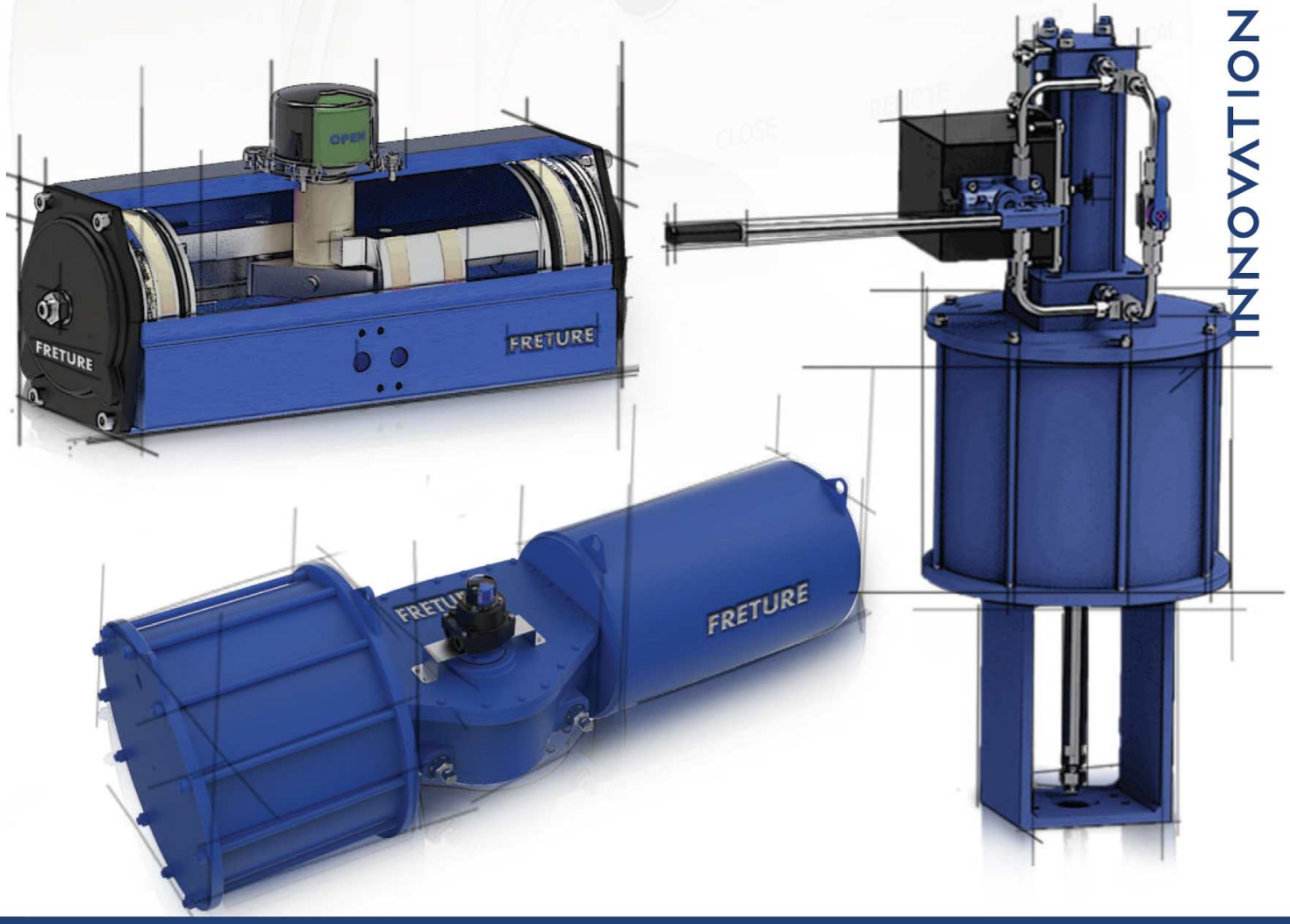

ACTUATOR AND CONTROL STATION

www.freture.com

ISO 9001 - 15000 | ISO 14000 | ISO 45001 | PED 2014 / 68 / EU

FRETURE
EMISSION FREE PROCESS

Rack & pinnion Rotary Actuator

A rack and pinion actuator is type of rotary actuator, a crucial component in industrial applications, particularly for valve automation, material handling systems, and robotic arms. It converts rotational motion into linear motion using two main components: a circular gear called the pinion and a linear gear known as the rack. As the pinion rotates, its teeth mesh with the rack's teeth, producing precise and controlled linear movement.



Freture's Rack and pinnion actuator are tailored with end caps for double acting, field convertibility between double and single acting, and high visibility indicators. Designed for reliability and low maintenance, they are available in hard anodized. These robust actuators provide precise motion control for diverse industrial automation needs.

Torque:	5 Nm to 7,800 Nm
Speed:	5°sec - 280°sec
Rotation:	0° to 180°(Bidirectional)
Air Supply Ports :	VDI/VDE3845 NAMUR, ISO228 G1/8"to 2"
Port Size :	1/8 inch to 2 inches (NPT or BSP)
Pressure:	1 bar to 12 bar (14.5 psi to 174 psi)
Material:	Aluminium, SS, cast iron, carbon steel, etc.
Temperature :	NBR Seals: -50°C to 70°C Viton Seals : -15°C to 160°C Silicone Seals : - 60°C to 200°C
Valve Interface:	ATEX 2014/34/EU, ISO 5211, DIN 3337v
Mounting Options.:	flange, foot-mounted, shaft-mounted, etc.
Noise Level :	50 dB to 65 dB
Coating Options:	PTFE coating,Hard Anodised, Nickel plated
Springs:	cartridge type,Shot peened
Endurance Testing :	500,000 cycles(EN 15714-3)
Compliance :	ISO 5211, CE, ATEX, ISO,EN etc.



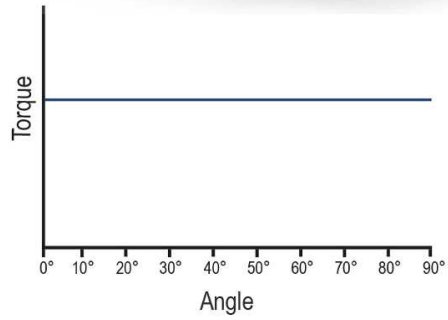

Rack and Pinion Double Acting



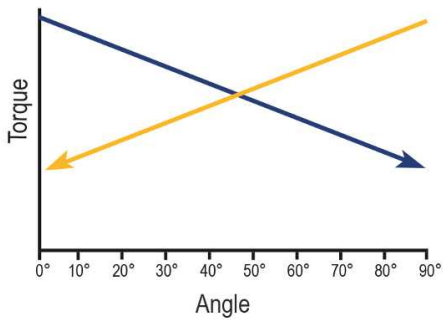

Rack and Pinion Spring Return

Air Spring

FRETURE
EMISSION FREE PROCESS

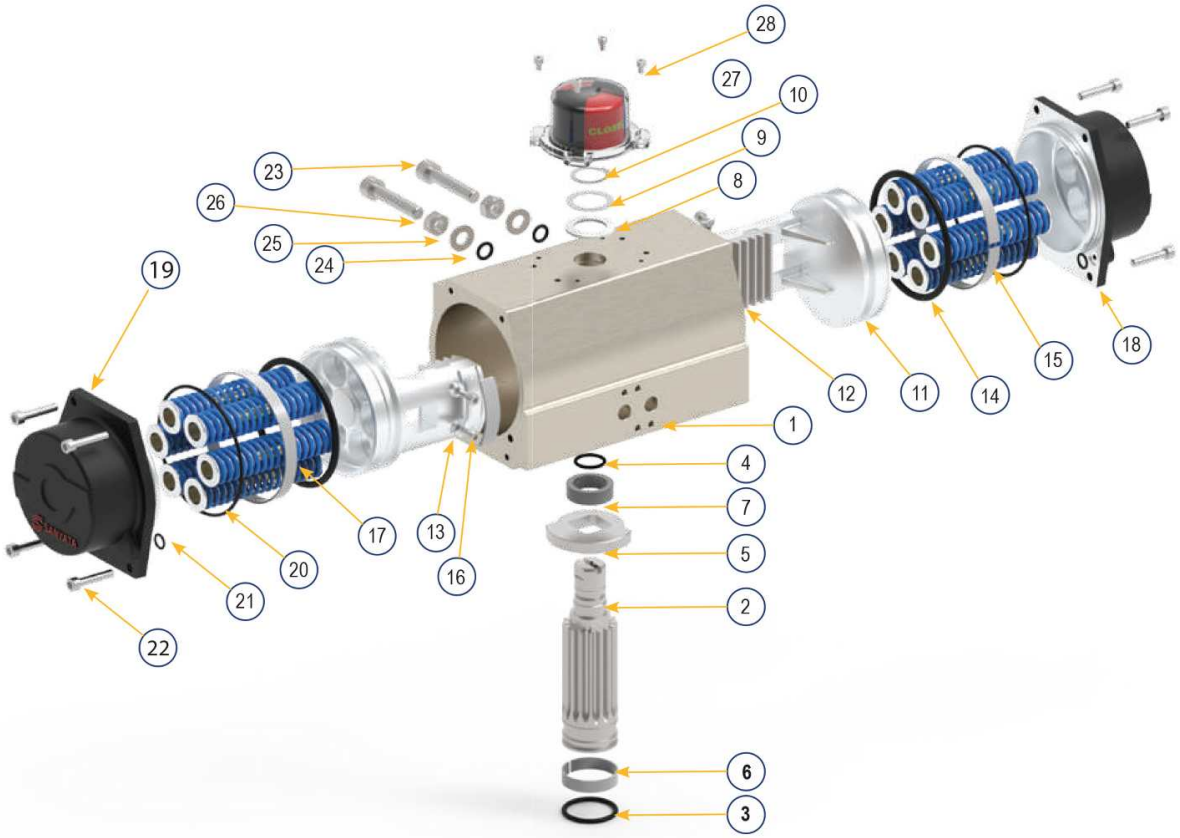

Material Of Construction		
1	Housing	Aluminium
2	Pinion	Steel
3	O-Ring	Rubber
4	O-Ring	Rubber
5	Stopper	Steel
6	Wear Ring	DELRIN®/Nylon
7	Bearing Bush	DELRIN®/Nylon
8	Thrust Washer	DELRIN®/Nylon
9	Shim	Stainless Steel
10	Circlip	Stainless Steel
11	Piston	Aluminium
12	Rack	Rack Steel
13	Cap Screw	Stainless Steel
14	O-Ring	Rubber
15	Wear Ring	DELRIN®/Nylon
16	Wear Strip	DELRIN®/Nylon
17	Spring Cartridge	Spring Steel
18	End Cover	Aluminium
19	End Cover	Aluminium
20	O-Ring	Rubber
21	O-Ring	Rubber
22	Cap screw	Stainless Steel
23	Cap Screw	Stainless Steel
24	O-Ring	Rubber
25	Washer	Stainless Steel
26	Hex Nut	Stainless Steel
27	Indicator	Plastic

Features

- Wide Torque Range: From 5 N-m to 7,800 N-m (44 lb-in to 69,000 lb-in).
- Superior Torque-to-Weight Ratio: Best in the industry.
- Efficient Design: Tailored end caps reduce air consumption.
- Flexible Configuration: Field-convertible between double-acting and single-acting.
- Standard Features: High visibility indicators and double end stops.
- Leak Prevention: Zero leak stop bolts with advanced seals.
- Durable Construction: Hard anodized or nickel-plated body and pinion for long-lasting performance.
- Compact and Safe: High torque in a compact design with easy-to-service cartridges.
- Material Options: Available in aluminum, carbon steel, and stainless steel.

FRETURE
EMISSION FREE PROCESS

Scotch Yoke Actuator

A pneumatic Scotch yoke actuators are essential components in industrial automation, especially for valve operations in industries such as oil and gas, chemical processing, and power generation. Our Scotch yoke actuators utilize compressed air to drive a piston connected to a yoke. This yoke mechanism includes a sliding pin that fits into a slot on the actuator's shaft. As the piston moves linearly, the sliding pin follows the slot's contour, causing the shaft to rotate. This rotary motion is then used to operate quarter-turn valves, adjust dampers, and perform other mechanical tasks.



Freture's Scotch yoke actuators are designed to deliver high torque output in a compact form, making them ideal for operating ball and butterfly valves. Our actuators feature nickel-plated cylinders for superior wear and corrosion resistance, protecting internal components from harsh environments and corrosive substances. This ensures long-term reliability and durability. Versatile and robust, our actuators are field-convertible between double-acting and single-acting configurations and include high-visibility indicators, double end stops, and stop bolts for enhanced safety. Certified to rigorous standards, Freture actuators guarantee quality and are well-suited for a wide range of industrial applications.

Features

- Delivers high torque from 1000 N-m to 100,000 N-m output while minimizing space and weight requirements.
- Nickel-plated cylinders provide high wear and corrosion resistance for extended operational life.
- Easily convertible between double acting and single acting configurations.
- Dome indicator for clear operational status visibility.
- Enhanced Safety: Springs are enclosed in a separate welded container for added safety.
- Stop bolts on the center body prevent leakages.
- Complies with ISO 9001:2015, EN15714-3, ATEX 2014/34/EU, PED, and CE standards.
- Requires no additional lubrication, reducing maintenance needs.

FRETURE

EMISSION FREE PROCESS

ITEM	DESCRIPTION	MATERIAL
1	Center Body	Ductile Iron
2	Yoke	Ductile Iron
3	Yoke Bush	Bronze
4	Guide Rod	Steel
5	Sliding Block	Bronze
6	Guide Block	Steel
7	Top Cover	Ductile Iron
8	Cover Plate	Steel
9	Pneumatic Cylinder	Steel
10	Head Flange	Steel
11	Piston	Steel
12	Piston Rod	Steel
13	Bearing Bush	Bronze
14	O-Ring	Rubber
15	O-Ring	Rubber
16	O-Ring	Rubber
17	Wear Ring	PTFE
18	O-Ring	Rubber
19	Tail Flange	Steel
20	Tie Rod	Steel
21	Stop Bolt	Steel
22	Spring Cartridge	Steel
23	Spring	Steel
24	Connecting Rod	Steel

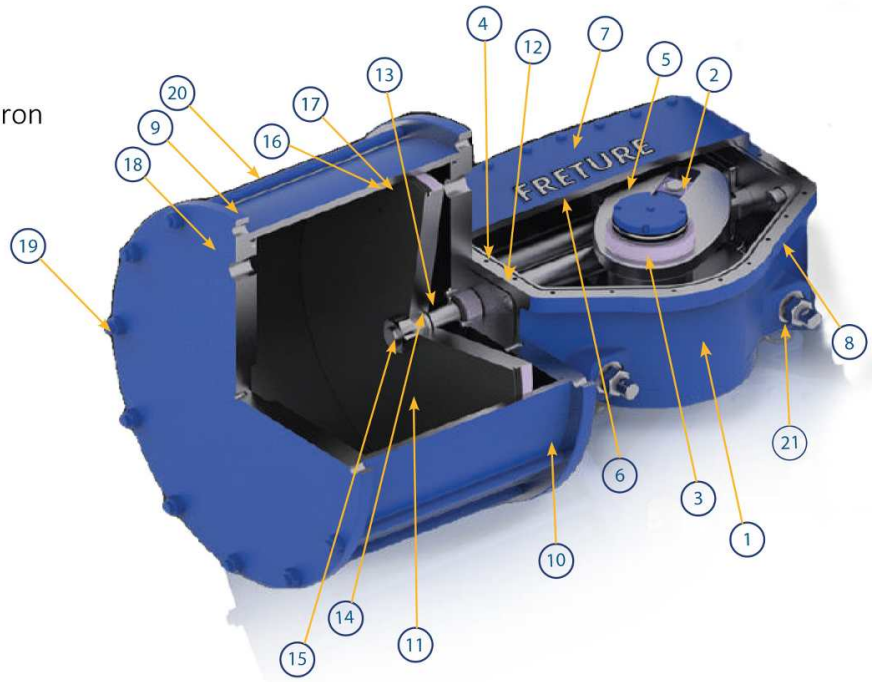

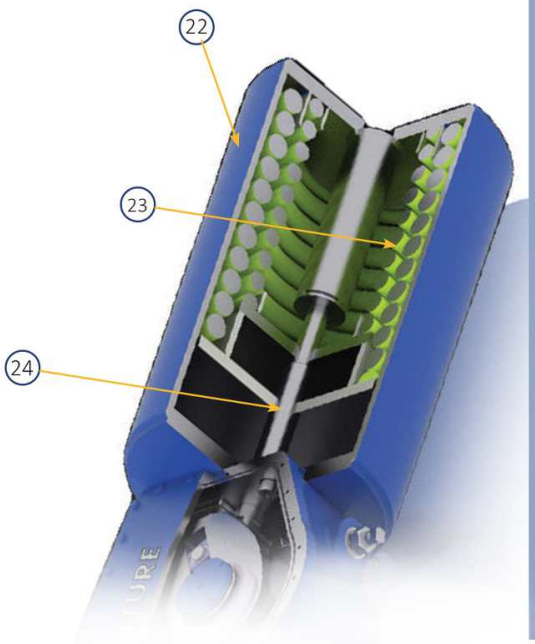

Torque:	1000 Nm to 100,000 Nm
Speed:	Upto 157 rad/s
Rotation:	0° to 92° (Bidirectional)
Air Supply Ports :	VDI/VDE3845 NAMUR, ISO228 G1/8”to 2”
Port Size :	1/8 inch to 2 inches (NPT or BSP)
Pressure:	7 bar to 10 bar (14.5 psi to 174 psi)
Material:	Aluminium, SS, cast iron, carbon steel, etc.
Temperature :	NBR Seals: -30°C to 70°C Viton Seals : -15°C to 160°C Silicone Seals : - 60°C to 200°C
Valve Interface:	ATEX 2014/34/EU, ISO 5211, DIN 3337
Mounting Options.:	flange, foot-mounted, shaft-mounted, etc.
Noise Level :	50 dB to 65 dB
Coating Options:	PTFE coating, Nickel plated, Epoxy
Springs:	cartridge type,Shot peened
Compliance :	ISO 5211, CE, ATEX, ISO,EN etc.

sales@freture.com

FRETURE
EMISSION FREE PROCESS

Linear Pneumatic Piston Actuator (LLP)

Freture's high-quality Linear Pneumatic Piston (LPP) actuators, offered in both double acting and spring return models, are designed for demanding on/off and control valve applications. With a proven piston and seal design and compact carbon steel honed cylinders, these actuators ensure reliable and long-lasting performance. The LPP series accommodates the stroke requirements of most valves and includes yoke brackets for easy mounting. Optional manual override ensures operability during power or signal failures, making Freture's LPP actuators ideal for industrial automation.





Features

- Mounting Provisions: Provision for limit switch box/positioner mounting.
- Spring Cartridges: Fully enclosed alloy steel spring cartridges for safe disassembly.
- Stroke Capability: Suitable for short stroke control valves and long stroke knife gate valves.
- Endurance: Designed and tested for up to 500,000 life cycles.
- Yoke Bracket: Suitable for various valve strokes.
- Manual Override: Options for hydraulic or gearbox manual override.
- Material and Construction: Robust carbon steel housings with customized materials for demanding applications.
- Position Indicator: Visual indicator for valve open/close position.
- Valve Interface and Standards: Threaded shaft and mounting flange as per ISO 5210, and management system in accordance with ISO 9001:2015.
- Environmental Compliance: Complies with EN60529 for IP68, with options for various working environments and temperatures.

FRETURE
EMISSION FREE PROCESS

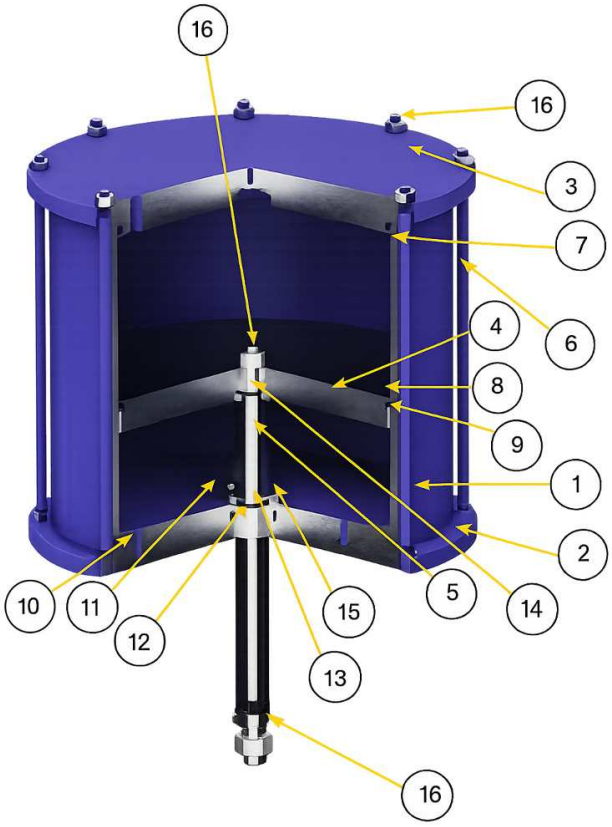

Torque:	20 Nm to 100,000
Port Size :	1/8 inch to 1 inch
Rod Diameter :	6 mm to 80 mm
Air Supply Ports :	EN ISO228 G1/2", G1", G1.1/2"
Pressure:	2 bar to 10 bar (29 psi to 145psi)
Material:	Aluminum, SS, Composites
Temperature :	NBR Seals: -30°C to 70°C
	Viton Seals : -15°C to 160°C
	Silicone Seals : - 60°C to 200°C
Valve Interface:	Mounting Flange(ISO 5210)
Mounting Options.:	Clevis, trunnion, flange, Rod,etc.
Noise Level :	50 dB to 65 dB
Coating Options:	PTFE coating, Nickel plated, Epoxy
Endurance Testing:	500,000 cycles
Compliance :	ISO 5211, CE, ATEX, ISO,EN etc.

No.	Description	Material
1	Cylinder	Steel
2	Head Flange	Steel
3	Tail Flange	Steel
4	Piston	Steel
5	Piston rod	Steel
6	Tie Rod	Steel
7	O-Ring	Rubber
8	O-Ring	Rubber
9	Wear Ring	PTFE
10	O-Ring	Rubber
11	Retainer Plate	Stainless Steel
12	Bearing Bush	Bronze
13	O-Ring	Rubber
14	O-Ring	Rubber
15	Screw Stainless	Stainless Steel
16	Hexagon Nut	Stainless Steel
17	Spring Shaft	Shaft Steel
18	Spring Can	Steel
19	Spring	Steel
20	Guide Tube	Tube Steel
21	Spring Plate	Plate Steel

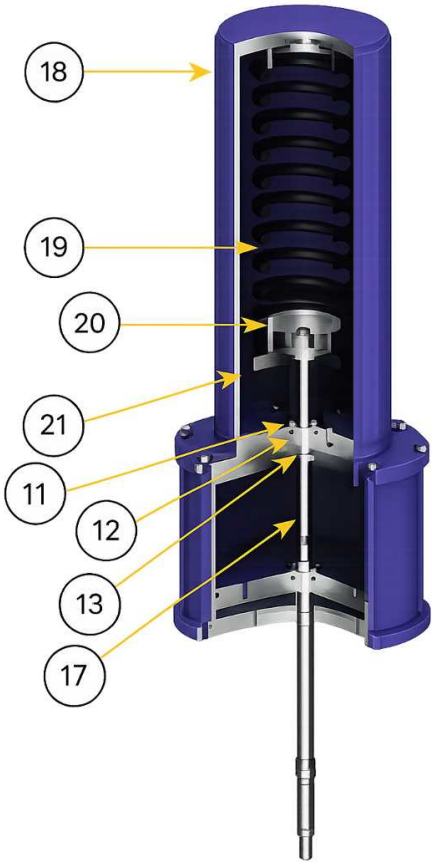

FRETURE
EMISSION FREE PROCESS

Limit Switch Box

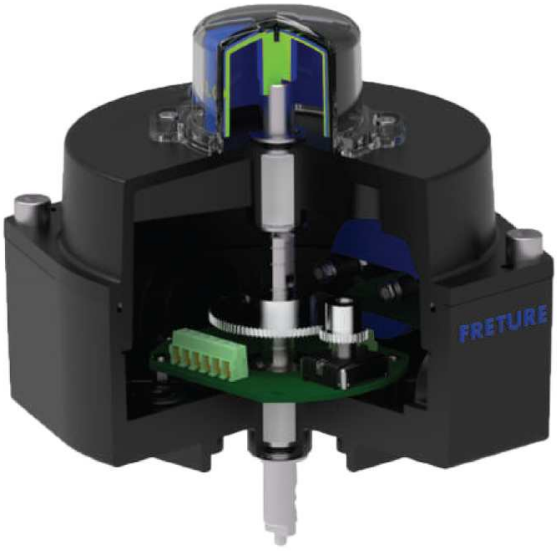

A limit switch box is designed as an essential device to be used in control process valve automation systems for precise indication. it with modular construction and analogue position transmitter allowing real-time monitoring of valve positions through a standard 4-20mA analog signal, with easy field calibration. Equipped with mechanical or proximity switches, these boxes send signals to a control system, enhancing safety and efficiency.

Freture's Limit Switch Box accommodate explosion-proof fire safe design conforming to the highest safety standards, Ex d II C, T6, and standard switches and industry-standard communication protocols, making them ideal for sectors like oil and gas, pharmaceuticals, and water treatment, ensuring reliable operation and maintenance of automated valve systems.

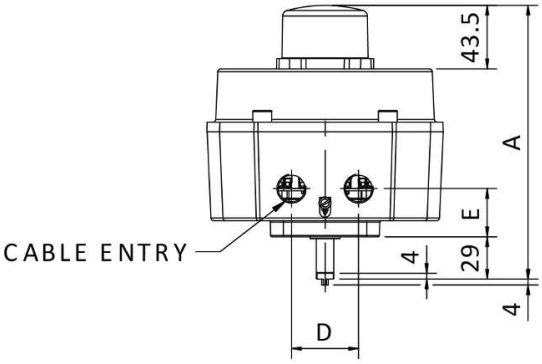

FRONT VIEW

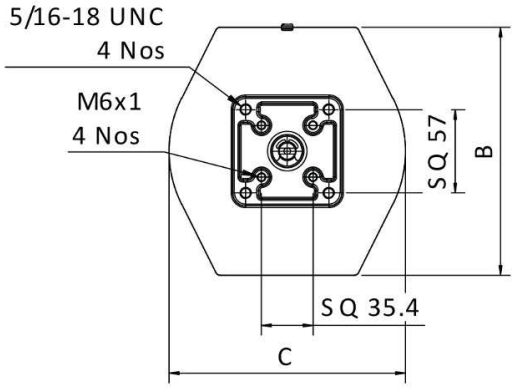

MOUNTING HOLES

- Accurately indicates the open or closed position of a valve, ensuring precise control.
- Provides both visual signals and electronic feedback for enhanced monitoring.
- Equipped with various switch types to suit different applications.
- Housed in durable, weather-resistant enclosures to withstand harsh environments.
- Available in flame-proof designs for high safety in hazardous areas.
- Modular construction for easy maintenance and component replacement.
- Monitors valve position through a standard 4-20mA analog signal.
- Enables on-site calibration for convenience and accuracy.
- Split Shaft Design for easy installation and better accessibility.
- Serrated Cams protecting settings against vibrations, ensuring stability.
- Simplified Plug-in connectors make wiring straightforward and less error-prone.
- Rugged PCB design supports currents up to 15A.
- Suitable for a range of industries including oil and gas, pharmaceuticals, and water treatment.

FRETURE
EMISSION FREE PROCESS

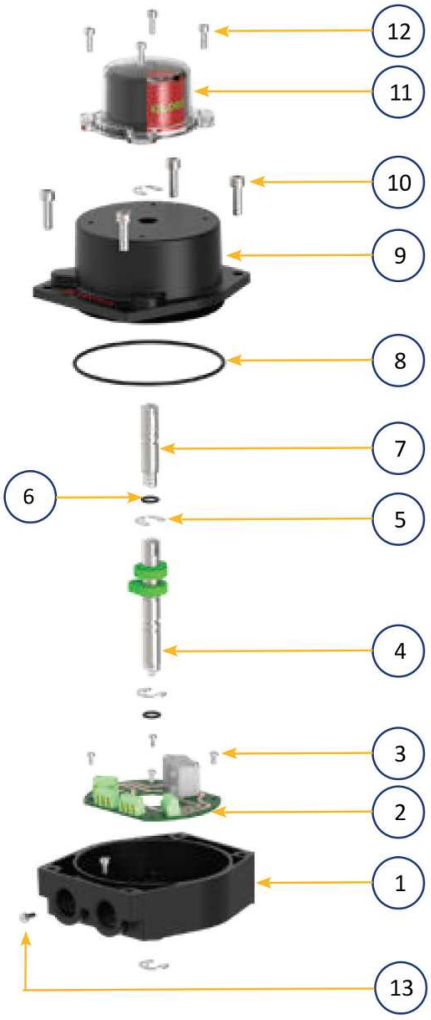

Technical Specification

Switch Type :	Mechanical / Flat Inductive / Cylindrical / Slot Inductive Inductive
Cable entry sizes :	1/2" NPT, 3/4"
Cable entries :	2(max 4)
Temperature Range :	Max -40°C to +125°C\
No. Of Switches:	Upto 15
Body Materials :	ALUMINIUM PRESSURE DIE CAST
Communication	HART / Mod Bus Profibus Etc
Voltage Rating :	24V DC
Monitoring Signal :	4-20mA analog signal
Weatherproof:	IP65 as standard / IP67 available
Flameproof:	Atex, IE CEx
Certification :	IP 66/IP 68 / CE marking / Ex d/ RoHs

Item	Description	Material
1	Housing	Aluminium
2	PCB Assembly	FR4
3	Screws For PCB	Stainless Steel
4	Lower Shaft and CAM Assembly	Stainless Steel + Plastic
5	External Circlip	Stainless Steel
6	O-Ring	NBR
7	Upper Shaft	Stainless steel
8	O-Ring	NBR
9	Cover	Aluminium
10	Screws For Cover	Stainless steel
11	Indicator Assembly	Polycarbonate
12	Screws For Indicator	Stainless steel

FRETURE
EMISSION FREE PROCESS

Local Control Station (LCS)



The Local control station by Freture Techno offers safe and convenient local control for your pumps, actuators, and other process equipment without the need for custom control panels. It is designed for easy field wiring and features a robust enclosure capable of withstanding repeated use.

Avoid the complications of nonstandard and complex bespoke junction boxes with SAFELocal, which includes standard knobs, LED indicators, and an E-Stop button. The compact and modular PCB design minimizes internal wiring complexity and enhances field reliability.

In addition to providing local controls, Freture's LCS functions as a junction box between your equipment and the DCS. The integration of four mechanical relays adds an extra layer of isolation between the equipment and the DCS. Local Control Station can be powered directly from compatible process equipment or via industry-standard external power AC or DC sources.

Technical Specification

Enclosure	ATEX/IECEx
Environmental protection	IP68
Temperature Range#	-40°C to +80°C
Power supply	24VDC/120VAC/230VAC
Mounting Options	Wall or pole mounted
Coating	Polyester powder coated
Conduit Entries	M20x1.5 M25 x 1.5
2 as Standard	1/2" NPT 3/4" NPT
Weight	2.7 Kg (6.0 lbs)

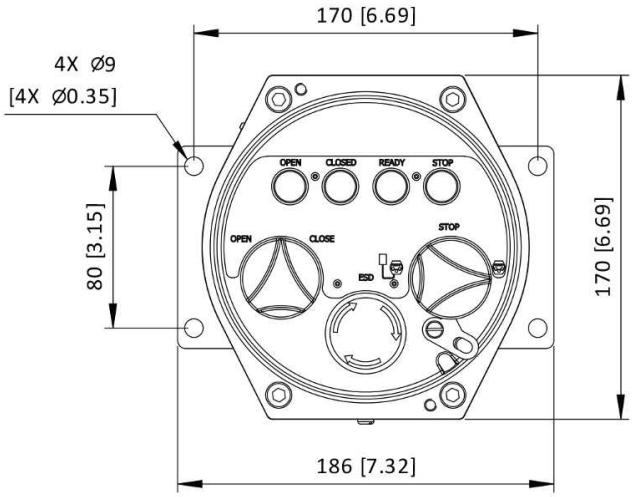

Features

- Powder-coated aluminium and stainless-steel options.
- Customizable LED indications for POWER, READY, OPEN, and CLOSE.
- Compatible with various process control equipment.
- Includes process interlock feature.
- Voltage options: 24VDC, 120VAC, 230VAC.
- Specially designed control knobs; mountable on pole, wall, or panel.
- Supports local and remote operation; emergency stop accessible.
- Operates on actuator or external power supply.
- Lockable control knob for safety.
- PCB design reduces wiring; terminals handle up to 5A at 230V.

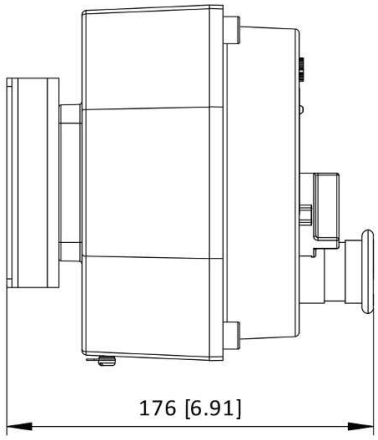

FRETURE
EMISSION FREE PROCESS

CLIENTELE

ADITYA BIRLA GRASIM
IndianOil
adani Power
PRIVI
TRADE Jindal MARK
AMINES PLASTICIZERS
VOLTAS A TATA Enterprise
Balaji AMINES
NOCIL
AARTI PHARMALABS
allnex The Coating Resins Company
IGPL I G PETROCHEMICALS LIMITED
HIKAL
BADOTHERM HOLLAND Member of the Badotherm Group
CRANE
ZEECO
GI Graphite
De Dietrich THERMIQUE
UNICHEM LABORATORIES LTD.
THERMAX
ORGENERGOSTROY
SML

FRETURE TECHNO PVT. LTD.

Fenkin Empire, Kaushalya, Station Road,
Jambli Naka, Thane (W) - 400602.

www.freture.com
+91 75066 82777
sales@freture.com